ACOUSTIC Solutions

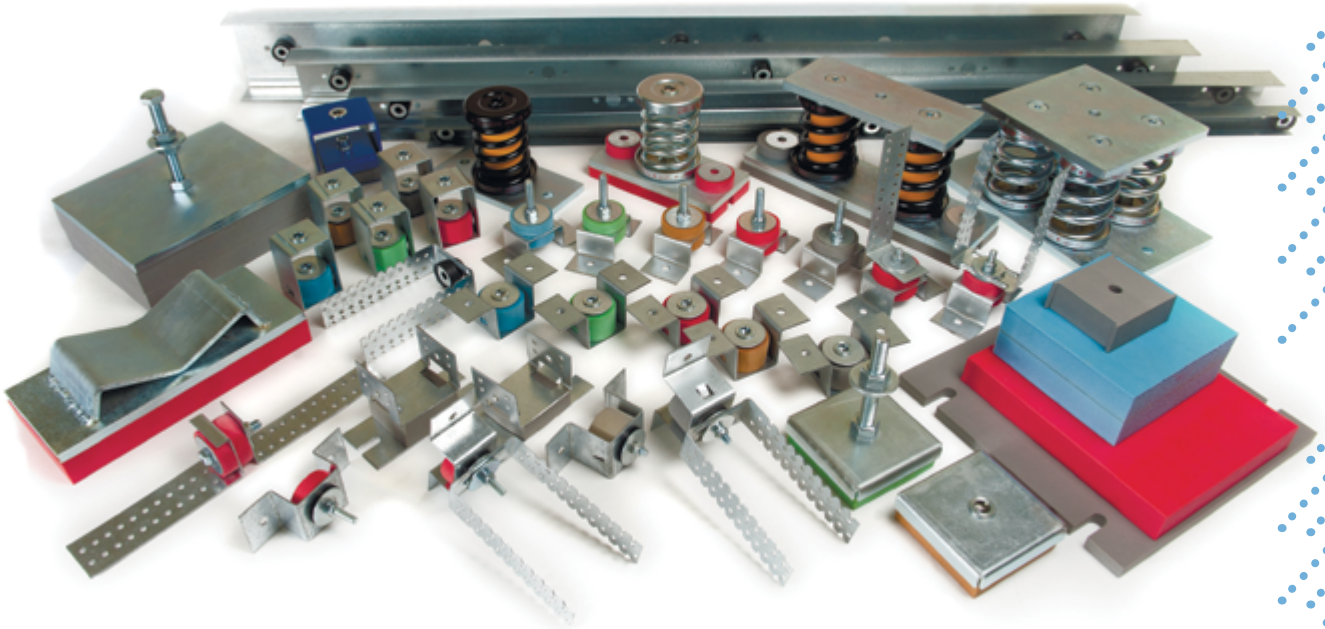

03/2014

SOUND ISOLATION AND ANTI VIBRATION MOUNTS

Vibrofix®
ACOUSTIC AND VIBRATION PROTECTION

Vibrofix®

GENERAL

Vibrofix®— is a group of special mounting elements designed to solve problems in the field of acoustic and vibration protection in industrial and civil engineering. Mounts have a large number of modifications differing in application, design and type of elastic elements.
Original Vibrofix mount designs are covered by international patents (Patent No. 41396 UA, Patent No. 47822 UA, Patent No. 54409 UA, Patent No. 95692 RU, Patent No. 95693 RU).

Certified products

Vibrofix acoustic mounts are certified in Russia and Ukraine:

- Certificate of Conformity No. 030006.024/497-13 Research Institute for Building Physics, Russia,
- Certificate of Conformity No. 1.052.0234432-13 UkrSEPRO, Ukraine.

Vibrofix acoustic mounts have also been tested at the Research Center Getzner Werkstoffe GmbH (Austria).

High performance sound insulation

High sound insulation performance of Vibrofix® mounts is confirmed by the certificates of tests carried out in Acoustics Labs "Ukrmetrteststandart" (Ukraine), State Research Institute of Building Constructions (Ukraine), Research Institute for Building Physics (Russia), as well as by the results of tests at the Research Center Getzner Werkstoffe GmbH (Austria).

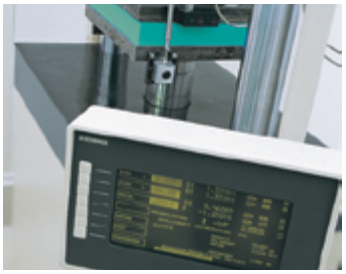

Frequency characteristics

Due to the low value of the resonance frequency (3 Hz and more) Vibrofix® mounts provide efficient sound insulation for building structures and vibration insulation for engineering equipment in a wide frequency range.

Durability

The design of Vibrofix® mounts includes elastic elements of high-performance anti-vibration material Sylomer® by Getzner Werkstoffe (Austria), which characteristics slightly vary for a long period of time, and even after 30 years the mounts do not lose their efficiency.

getzner
the good vibrations company

Vibrofix CD

Vibrofix®

SOUND ISOLATION WALL MOUNT

Vibrofix CD mounts are used for installation of high-performance soundproof frame linings in the rooms to which increased requirements for acoustic protection (especially at low frequencies) apply:

- recording studios
- meeting rooms
- transformer substations
- cinemas
- ventilation chambers

Vibrofix CD mounts are made of durable galvanized steel with a thickness of 1.5 mm. A polyurethane elastomer (Getzner Werkstoffe, Austria) is applied as an elastic element, specially designed for solving problems in the field of vibration protection. For easy installation the mount is completed with U-shaped bracket made of galvanized steel with a thickness of 1 mm.

- patented mounting system (Patent No. 47822 UA, Patent No. 95693 RU)
- pre-compression of the elastic element – 145 N
- efficient acoustic isolation within building structures
- increased sound isolation within low-frequency range
- full compatibility with KNAUF profile system

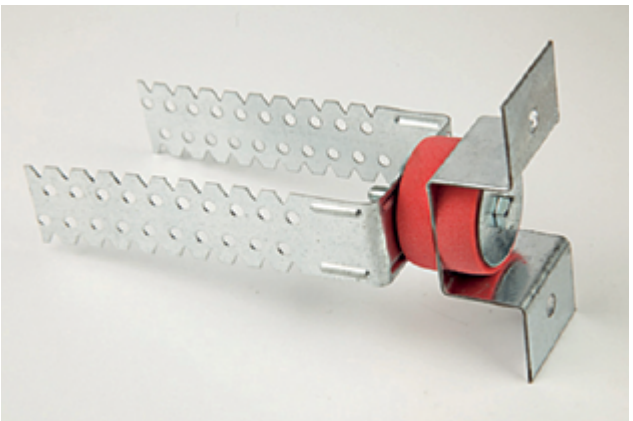

Vibrofix CD

Technical specifications

Mount type	Mount load*, **kg**	Min. resonance frequency, **Hz**	Note
Vibrofix CD	20...30	8	U-shaped bracket included

**Weight of the lining per mount*

Vibrofix CD — **Dimensions, mm**

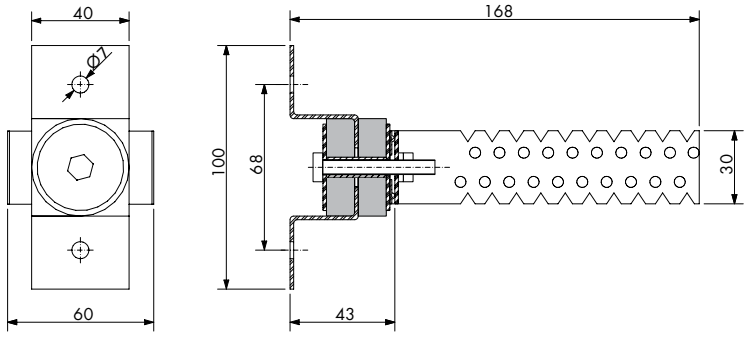

Deformation of the elastic element depending on the compression/tension load

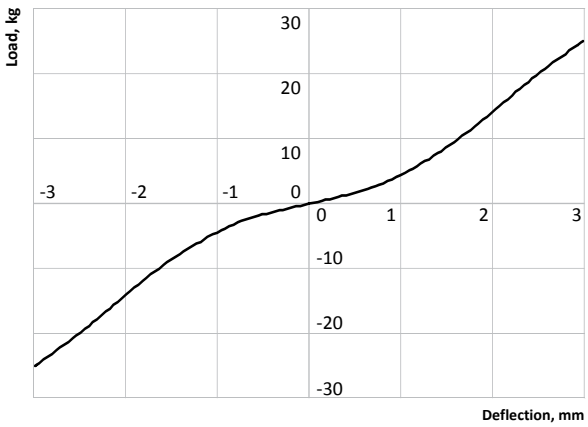

Acoustic isolation of the gypsum block partition (airborne sound):

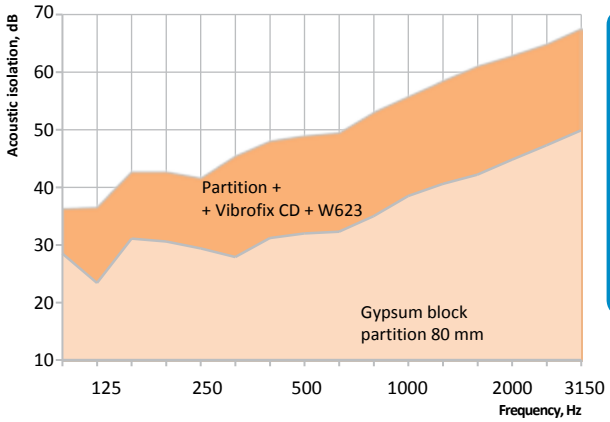

*Installation of the gypsum plasterboard lining using Vibrofix CD mounts allows to increase acoustic isolation of the wall ΔR up to **19 dB***

Vibrofix Uni L

Vibrofix®

SOUND ISOLATION WALL MOUNT

Vibrofix UNI-L mounts are used for installation of soundproof linings of great height in the rooms to which increased requirements for acoustic protection apply:

- recording studios
- cinemas
- conference rooms
- TV pavilions
- meeting rooms
- ventilation chambers

Vibrofix Uni L mounts are made of durable galvanized steel with a thickness of 1.5 mm. A polyurethane elastomer (Getzner Werkstoffe, Austria) is applied as an elastic element, specially designed for solving problems in the field of vibration protection. The mount is completed with L-shaped bracket made of galvanized steel with a thickness of 2 mm.

- patented mounting system (Patent No. 47822 UA, Patent No. 95693 RU)
- pre-compression of the elastic element – 145 N
- efficient acoustic isolation within building structures
- increased sound isolation within low-frequency range
- compatibility with KNAUF profile system

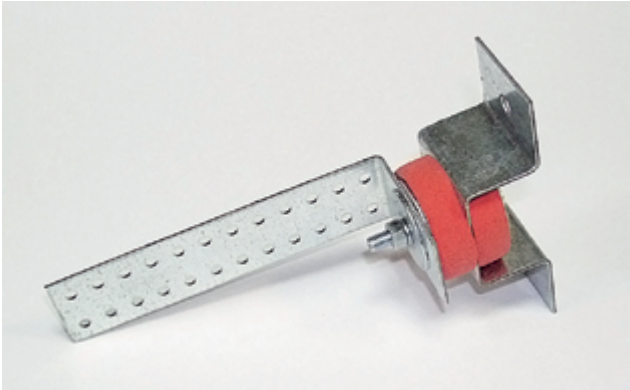

Vibrofix Uni L

Technical specifications

Mount type	Mount load*, **kg**	Min. resonance frequency, **Hz**	Note
Vibrofix Uni L	20...30	8	L-shaped bracket included

** Weight of the lining per mount*

Vibrofix Uni L — **Dimensions, mm**

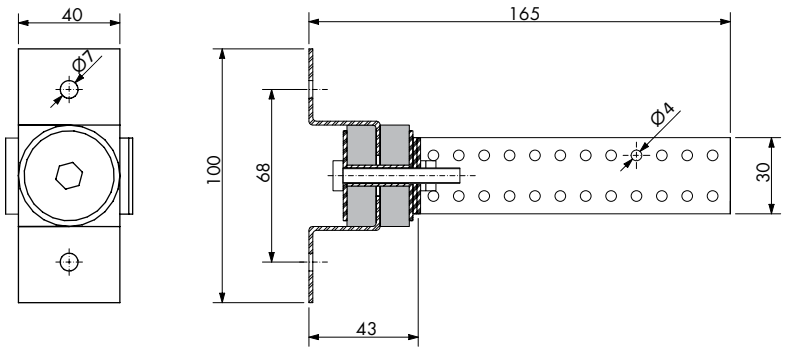

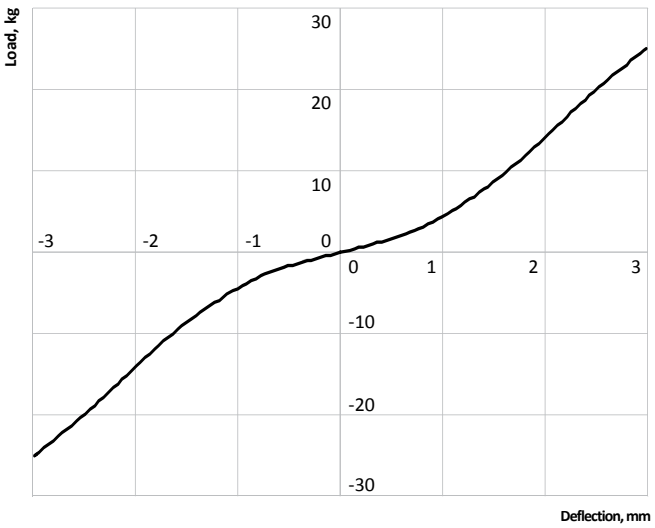

Deformation
of the elastic element depending
on the compression/tension load

Vibrofix Connect

Vibrofix®

SOUND ISOLATION WALL MOUNT

Vibrofix Connect mounts are used for installation of soundproof partitions of great height on independent frames in the rooms to which increased requirements for acoustic protection apply:

- recording studios
- multiplex cinemas
- conference rooms
- TV pavilions
- meeting rooms
- ventilation chambers

Vibrofix Connect mounts are made of durable galvanized steel with a thickness of 1.5 mm. A polyurethane elastomer (Getzner Werkstoffe, Austria) is applied as an elastic element, specially designed for solving problems in the field of vibration protection.

The mount is completed with L-shaped bracket made of galvanized steel with a thickness of 2 mm with the possibility of the contact plane adjustment.

- patented mounting system (Patent No. 47822 UA, Patent No. 95693 RU)
- efficient acoustic isolation within building structures
- compatibility with KNAUF profile system

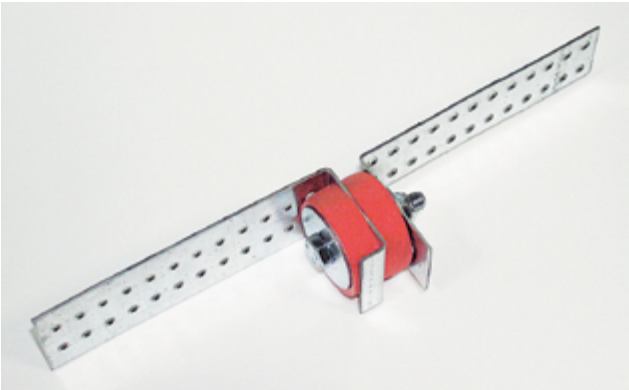

Vibrofix Connect

- increased sound isolation within low-frequency range
- pre-compression of the elastic element – 145 N

Technical specifications

Mount type	Mount load*, **kg**	Min. resonance frequency, **Hz**	Note
Vibrofix Connect	20...30	8	L-shaped bracket included

** Weight of the lining per mount*

Vibrofix Connect — **Dimensions, mm**

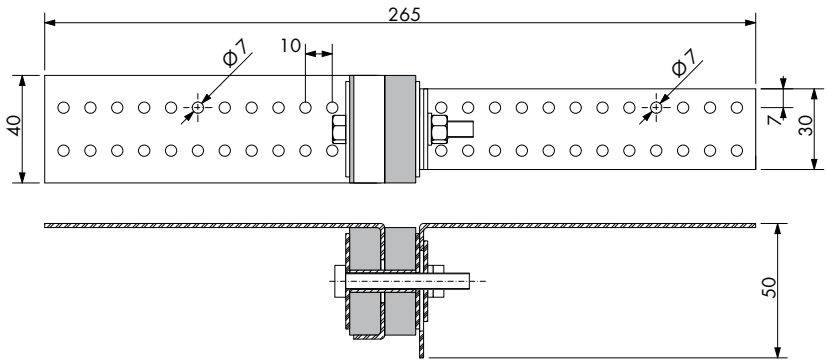

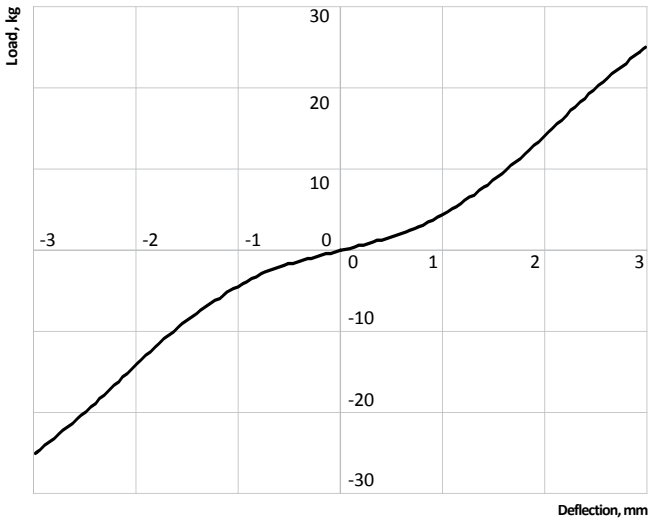

Deformation
of the elastic element depending
on the compression/tension load

Vibrofix Protector

Vibrofix®

UNIVERSAL SOUND ISOLATION WALL MOUNT

Vibrofix Protector universal acoustic mounts are used in the designs of soundproof suspended ceilings and wall frame linings to isolate domestic sources of noise, as well as at the installation of sound-absorbing panel constructions.

Vibrofix Protector mounts are used in the rooms to which high requirements for sound isolation do not apply.

Vibrofix Protector mount is a metal U-shaped bracket with a synthetic rubber based elastic element.

- efficient acoustic isolation within building structures
- full compatibility with KNAUF profile system
- minimum frame depth 40 mm
- easy installation

Vibrofix Protector

Vibrofix Protector — Dimensions, mm

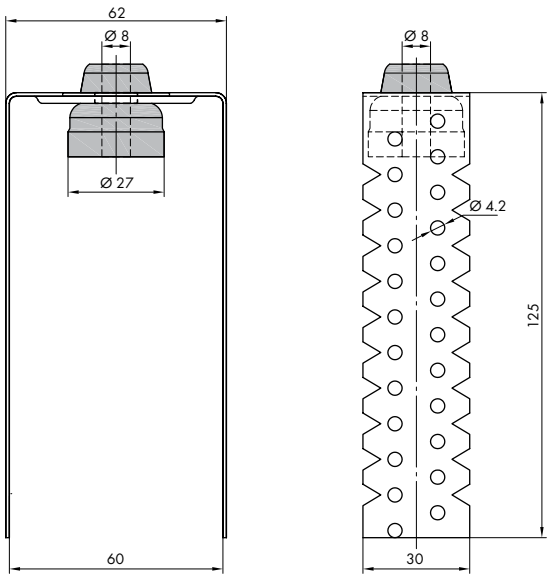

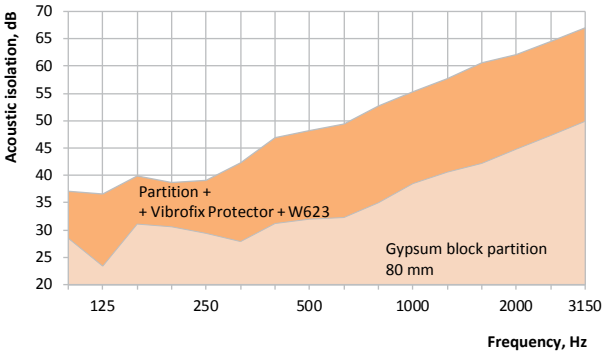

Additional acoustic isolation of the W623* lining installed using Vibrofix Protector mounts

Installation of the gypsum plasterboard lining using Vibrofix Protector mounts allows to increase acoustic isolation of the wall ΔR up to ***14 dB***

** Original design - gypsum block partition 80 mm thick*

Vibrofix Liner

Vibrofix®

SOUND ISOLATION PROFILES

Vibrofix Liner channel profiles are used to reduce the indirect transmission of sound from the floor slabs to the partition frames, wall and suspended ceiling lining in dry construction systems.

Vibrofix Liner is a metal channel profile with structurally built-in mount assemblies for the frame fillings. Mount assemblies use synthetic rubber based elastic element. All mount assemblies are completed with steel washers. Each Vibrofix Liner profile has a standard length of 3 m and includes 7 mount assemblies.

- patented mounting system (Patent No. 41396 UA, Patent No. 95692 RU)
- acoustic isolation within building structures
- compatibility with KNAUF profile system
- various partition and lining configurations

Vibrofix Liner

Technical specifications

Profile type	Width, **mm**	Length, mm	Height, **mm**	Number of elastic elements per channel, **pcs.**
Vibrofix Liner 28	28	3000	27	7
Vibrofix Liner 50	50		40	
Vibrofix Liner 75	75			
Vibrofix Liner 75	100			

Vibrofix Liner (method of application)

- paste a resilient pad on the Vibrofix Liner guide profiles prior to installation of the frame;
- fix Vibrofix Liner channel profiles to the floor and ceiling through sound insulating units using only anchors or dowels of Ø 8 mm;
- eliminate rigid connection between floor and plasterboard lining. For this purpose leave a gap of 5-10 mm between the lower edge of the KNAUF boards and the floor during installation works (e.g., using mounting wedges). Fill the resulting gap with neutral silicone sealant.

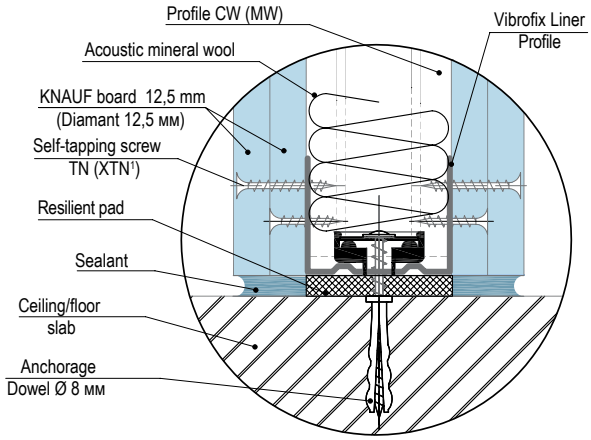

[1] *Used for KNAUF Diamant boards*

Vibrofix P

Vibrofix®

ACOUSTIC MOUNTS FOR SUSPENDED CEILINGS

Vibrofix P acoustic mounts are used in construction for installation of frames of soundproof suspended ceilings in the rooms of residential and public buildings.

Vibrofix P mounts are made of durable galvanized steel with a thickness of 1.5 mm. A polyurethane elastomer (Getzner Werkstoffe, Austria) is applied as an elastic element, specially designed for solving problems in the field of vibration protection.

- efficient acoustic isolation within building structures
- patented vertical displacement limiting system (Patent No. 47822 UA, Patent No. 95693 RU)
- low deflection at operating load
- minimum frame depth 60 mm
- full compatibility with KNAUF profile system

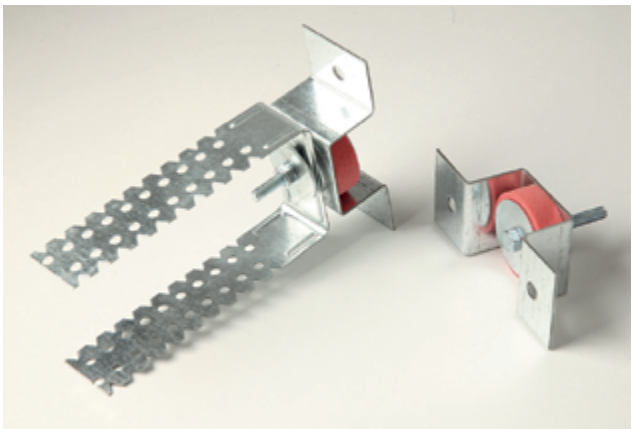

Vibrofix P and Vibrofix PU

Technical specifications

Mount type	Operating load range, **kg**	Min. resonance frequency, **Hz**	Deflection at operating load, **mm**	Notes
Vibrofix P	7...14	15,5	1,4...2,2	for mounting adjustable hangers on the spokes
Vibrofix PU	7...14	15,5	1,4...2,2	U-shaped bracket included

Vibrofix P — **Dimensions, mm**

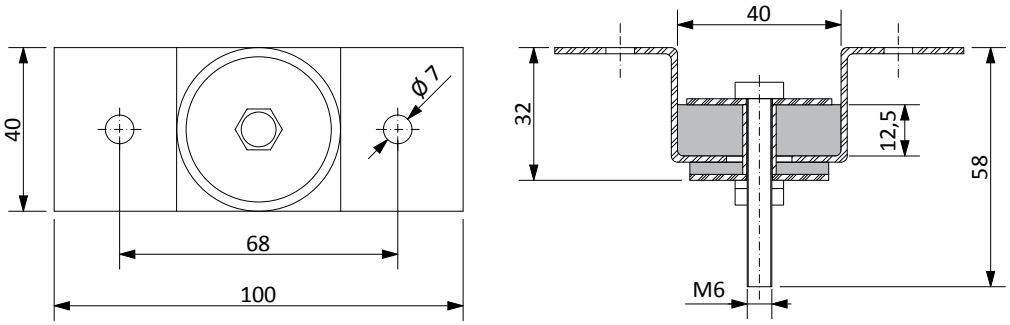

Deflection of the elastic element depending on the compression/tension load

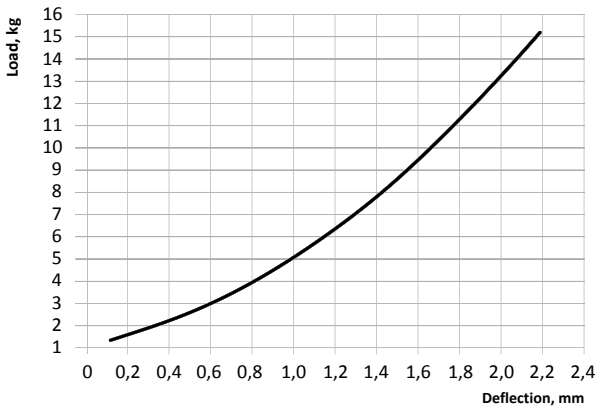

Floor slab acoustic isolation (airborne sound)

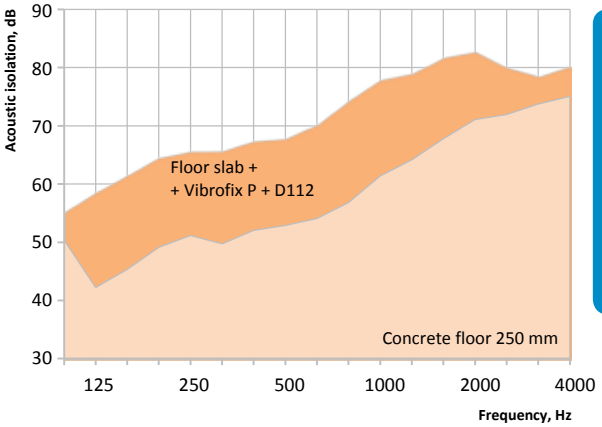

*Installation of KNAUF suspended ceiling using Vibrofix P mounts increases soundproofing of the floor slab ΔR up to **18 dB***

Vibrofix SP

Vibrofix®

MOUNTS FOR ACOUSTIC SUSPENDED CEILINGS

Vibrofix SP mounts are used for installation of the soundproof suspended ceilings in the rooms to which increased requirements for acoustic protection apply:

- recording studios
- meeting rooms
- transformer substations
- cinemas
- ventilation chambers
- technical rooms

Vibrofix SP mounts are made of durable galvanized steel with a thickness of 1.5 mm. A polyurethane elastomer (Getzner Werkstoffe, Austria) is applied as an elastic element, specially designed for solving problems in the field of vibration protection.

- patented hanger vertical displacement limiting system (Patent No. 47822 UA, Patent No. 95693 RU)
- efficient acoustic isolation within building structures
- increased sound isolation within low frequency range
- full compatibility with KNAUF profile system

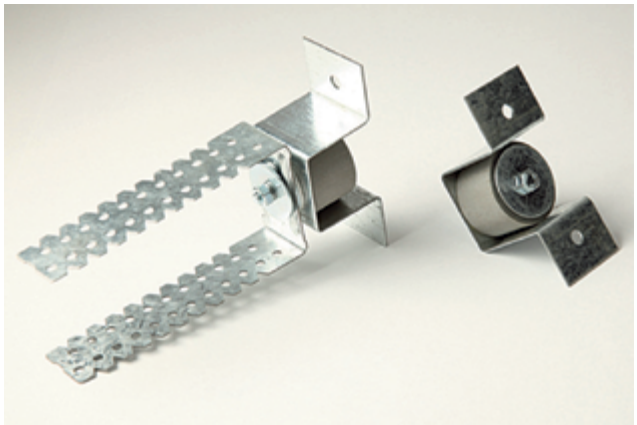

Vibrofix SP and Vibrofix SPU

Technical specifications

Mount type	Operating load range, **kg**	Min. resonance frequency, **Hz**	Deflection at operating load, **mm**	Notes
Vibrofix SP	12,5...25	12	2,2...3,2	for mounting adjustable hangers on the spokes
Vibrofix SPU	12,5...25	12	2,2...3,2	U-shaped bracket included

Vibrofix SP mount — **Dimensions, mm**

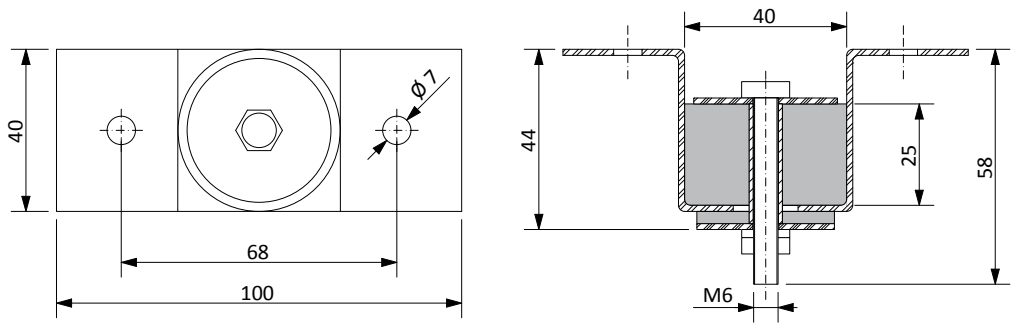

Deflection-load relation diagram

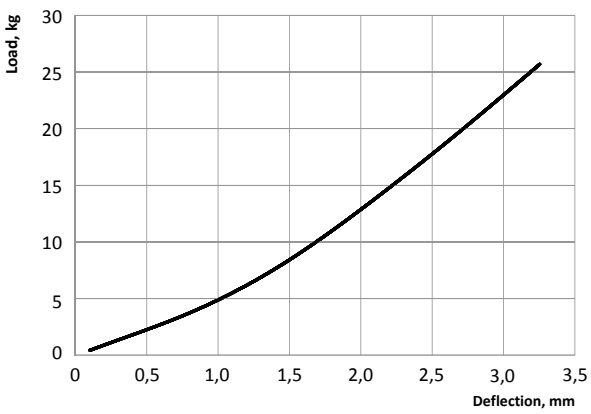

Floor slab acoustic isolation (airborne sound)

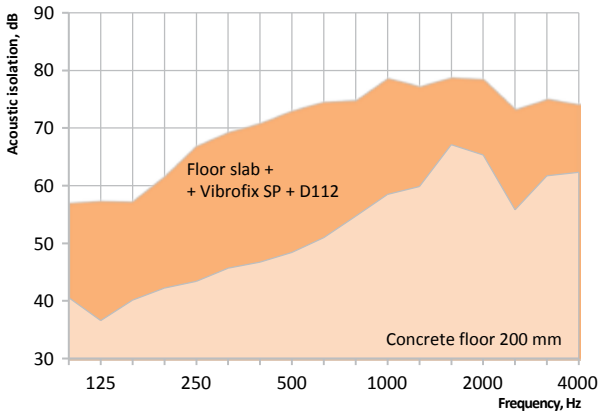

*Installation of KNAUF suspended ceiling using Vibrofix SP mounts increases acoustic isolation of the floor slab ΔR up to **25 dB***

Vibrofix Floor

Vibrofix®

ACOUSTIC MOUNTS FOR FLOATING FLOORS ON JOISTS

Vibrofix Floor mounts are used in installation of soundproof floating floors on joists in the rooms to which high requirements for the structure-borne noise isolation apply. The use of these mounts is very efficient in the process of reconstruction of buildings with wooden beams, which do not allow using massive concrete screed.

- cinemas
- attic floors of residential buildings
- buildings with lightweight floors
- recording studios
- log houses

Vibrofix Floor mounts are made of durable galvanized steel with a thickness of 1.5 mm. A polyurethane elastomer (Getzner Werkstoffe, Austria) is applied as an elastic element, specially designed for solving problems in the field of vibration protection.

- patented mounting system (Patent No. 54409 UA)
- high airborne and impact sound isolation
- low resonance frequency
- easy installation
- floor level height adjustment

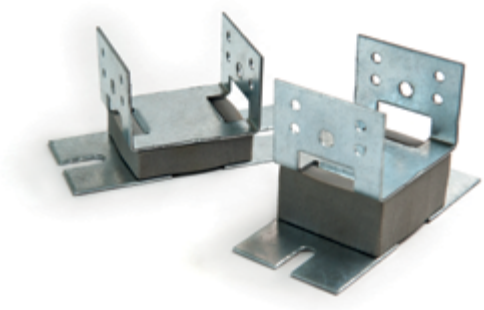

Vibrofix Floor and Vibrofix Floor Plus

Technical specifications

Mount type	Operating load range, **kg**	Min. resonance frequency, **Hz**	Deflection at operating load, **mm**	Notes
Vibrofix Floor	50...100	15	0,8...1,5	for residential and public buildings
Vibrofix Floor Plus	40...80	10,5	1,5...3,1	for special purpose rooms

Vibrofix Floor — **Dimensions, mm**

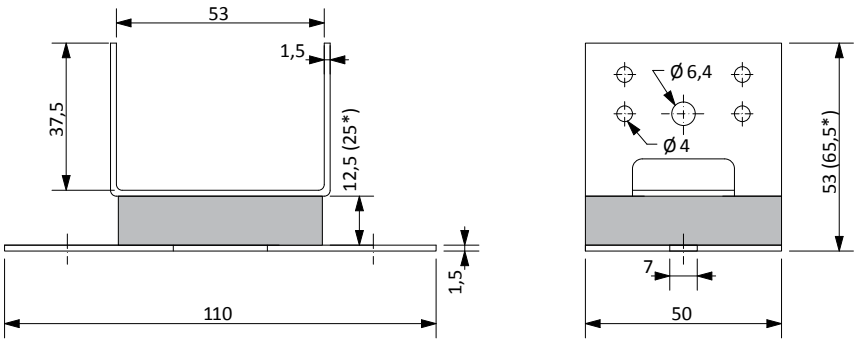

** Dimensions for Vibrofix Floor Plus mount*

Deflection of the elastic element depending on the compression/tension load

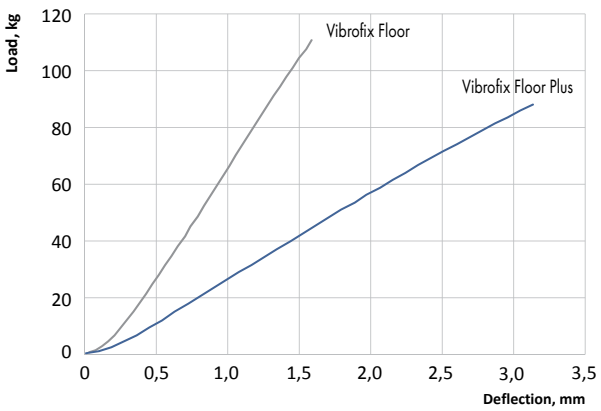

Floor slab acoustic isolation (impact sound)

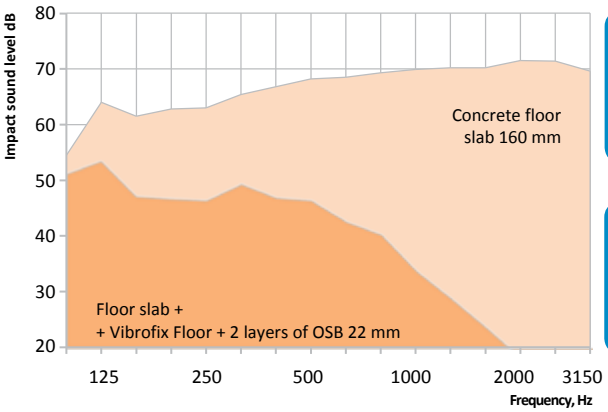

Impact noise level reduction index Vibrofix Floor ***ΔL_{nw} = 34 dB***

Impact noise level reduction index Vibrofix Floor Plus ***ΔL_{nw} = 38 dB***

Vibrofix Uni

Vibrofix®

UNIVERSAL ANTI VIBRATION MOUNTS

Vibrofix Uni universal mounts are used for installation of engineering equipment, vibration isolation of ventilation ductwork and pipelines, acoustic isolation of building structures.
Vibrofix Uni mounts are made of durable galvanized steel with a thickness of 1.5 mm. A polyurethane elastomer (Getzner Werkstoffe, Austria) is applied as an elastic element, specially designed for solving problems in the field of vibration protection.

- patented system of the elastic element pre-compression (Patent No. 47822 UA, Patent No. 95693 RU)
- efficient acoustic isolation within building structures
- vibration isolation of the multipurpose engineering equipment
- efficient vibration isolation at low frequencies
- easy installation

Vibrofix Uni

Technical specifications

Mount type	Elastic element color	Operating load range*, **kg**	Operating frequency, **Hz**	Min. resonance frequency, **Hz**
Vibrofix Uni 28	blue	2...3	>29	16
Vibrofix Uni 55	green	3...6	>28	14
Vibrofix Uni 110	brown	6...12	>24	13
Vibrofix Uni 220	red	12...22	>24	14
Vibrofix Uni 450	grey	22...52	>22	14

** Load impact is directed along z-axis*

Vibrofix Uni — Dimensions, mm

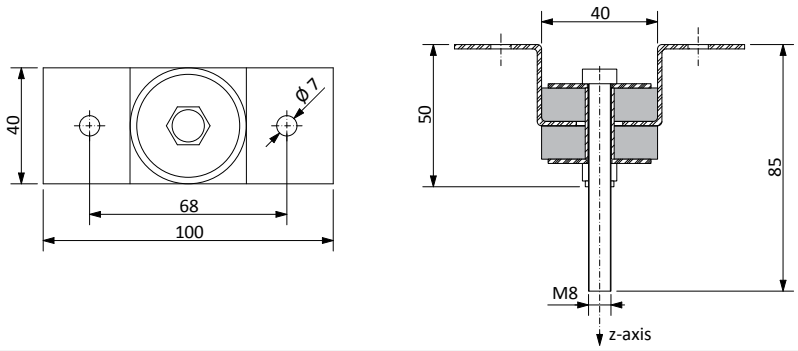

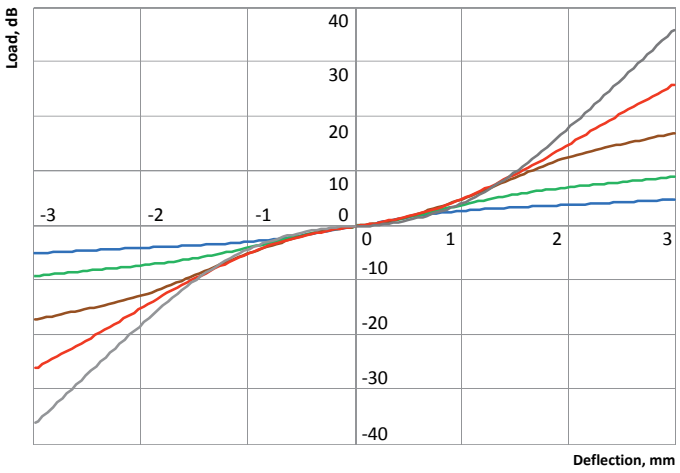

Deflection of the elastic element depending on the load on the mount acting along z-axis

- Vibrofix Uni 28
- Vibrofix Uni 55
- Vibrofix Uni 110
- Vibrofix Uni 220
- Vibrofix Uni 450

Vibrofix Techno

Vibrofix®

ANTI VIBRATION MOUNTS

Vibrofix Techno mounts are used for vibration isolation of the suspended engineering equipment, air ducts and pipelines.
Vibrofix Techno mounts are made of durable galvanized steel with a thickness of 1.5 mm. A polyurethane elastomer (Getzner Werkstoffe, Austria) is applied as an elastic element, specially designed for solving problems in the field of vibration protection.

- efficient vibration isolation of the engineering equipment
- low resonance frequency
- easy installation
- compatibility with standard mounting systems

Vibrofix Techno

Technical specifications

Mount type	Elastic element color	Operating load range, **kg**	Equipment operating frequency, **rpm**	Min. resonance frequency, **Hz**	Deflection, **mm**
Vibrofix Techno 28	blue	1,5...3,0	>1860	16,0	1,0...2,4
Vibrofix Techno 55	green	3,0...6,0	>1530	11,5	1,1...2,6
Vibrofix Techno 110	brown	5,0...10,0	>1400	12,0	1,4...2,7
Vibrofix Techno 220	red	7,5...15,0	>1400	12,0	1,7...2,9
Vibrofix Techno 450	grey	12,5...25,0	>1400	12,0	1,9...3,2
Vibrofix Techno 850	turquoise	25,0...50,0	>1270	12,5	2,7...4,0

Vibrofix Techno — Dimensions, mm

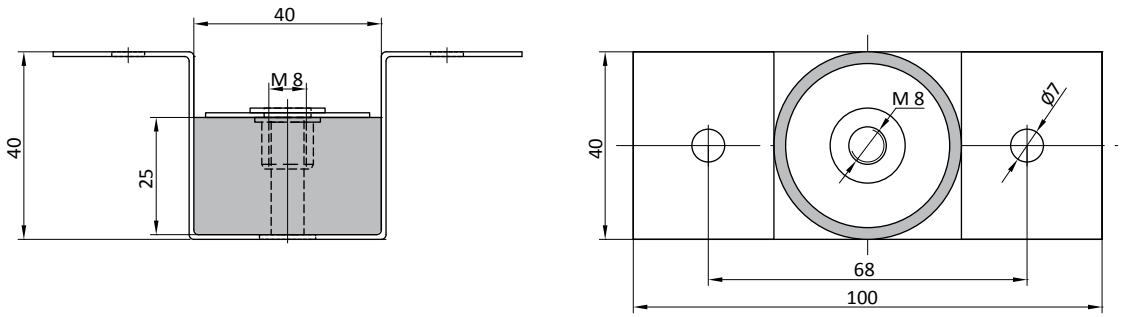

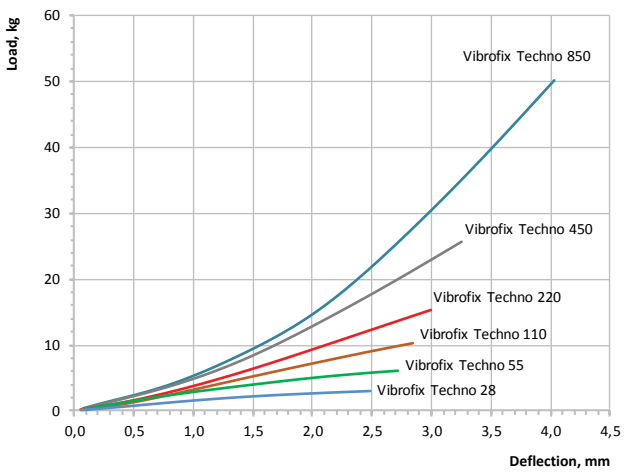

Deflection
of the elastic element
depending on the mount load

Vibrofix Box

Vibrofix®

ANTI VIBRATION MOUNTS

Vibrofix Box mounts are used for vibration isolation of the suspended engineering equipment, air ducts and pipelines, and sound insulation of building structures. Vibrofix Box mounts are made of durable galvanized steel with a thickness of 2 mm. A polyurethane elastomer (Getzner Werkstoffe, Austria) is applied as an elastic element, specially designed for solving problems in the field of vibration protection.

- efficient vibration isolation of the suspended engineering equipment
- low resonance frequency
- high durability
- easy installation

Vibrofix Box

Technical specifications

Mount type	Elastic element color	Range of operating loads, **kg**	Operating frequency of the equipment, **rpm**	Min. resonance frequency, **Hz**	Deflection, **mm**
Vibrofix Box 28	blue	1,5...3,0	>1860	16,0	1,0...2,4
Vibrofix Box 55	green	3,0...6,0	>1530	11,5	1,1...2,6
Vibrofix Box 110	brown	5,0...10,0	>1400	12,0	1,4...2,7
Vibrofix Box 220	red	7,5...15,0	>1400	12,0	1,7...2,9
Vibrofix Box 450	grey	12,5...25,0	>1400	12,0	1,9...3,2
Vibrofix Box 850	turquoise	25,0...50,0	>1270	12,5	2,7...4,0

Vibrofix Box — Dimensions, mm

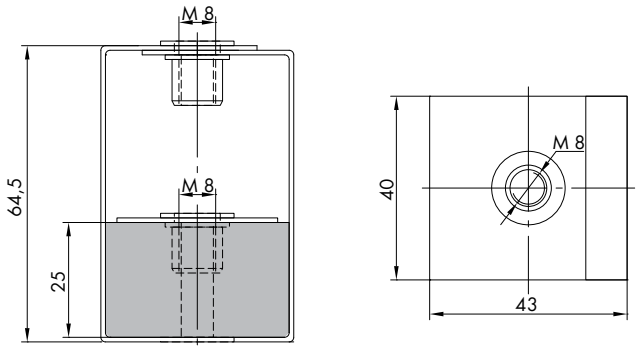

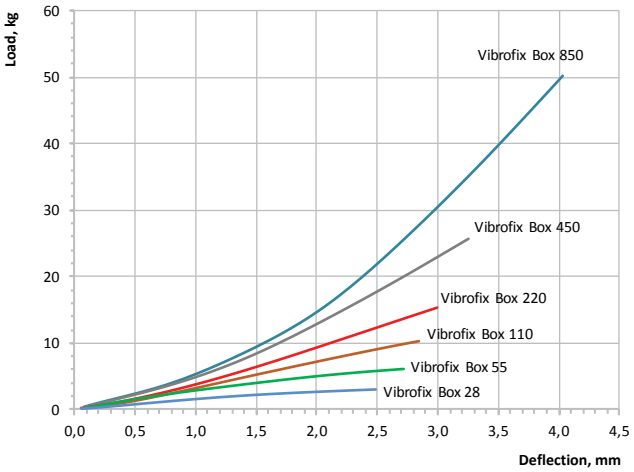

Deflection
of the elastic element
depending on the mount load

Vibrofix Box Pro

Vibrofix®

VIBRATION ISOLATION MOUNTS FOR ENGINEERING EQUIPMENT

Vibrofix Box Pro mounts are used for vibration isolation of heavy suspended engineering equipment, air ducts and heavy-gauge pipelines:

- suspended ventilation units
- indoor units of the air conditioning systems
- pipelines

Vibrofix Box Pro mounts are made of durable galvanized steel with a thickness of 3 mm. A polyurethane elastomer (Getzner Werkstoffe, Austria) is applied as an elastic element, specially designed for solving problems in the field of vibration protection.

- efficient vibration isolation of heavy suspended engineering equipment and pipelines
- low resonance frequency 7-8 Hz
- easy installation

Vibrofix Box Pro

Technical specifications

Mount name	Elastic element color	Range of operating loads, **kg**	Operating frequency of the equipment, **rpm**	Minimum resonance frequency, **Hz**	Deflection, **mm**
Vibrofix Box Pro 220	red	27...44	>1440	11,6	1,1...2
Vibrofix Box Pro 450	grey	44...90	>1380	10,6	1,2...2,6
Vibrofix Box Pro 850	turquoise	90...152	>1200	11	1,6...3

Vibrofix Box Pro — Dimensions, mm

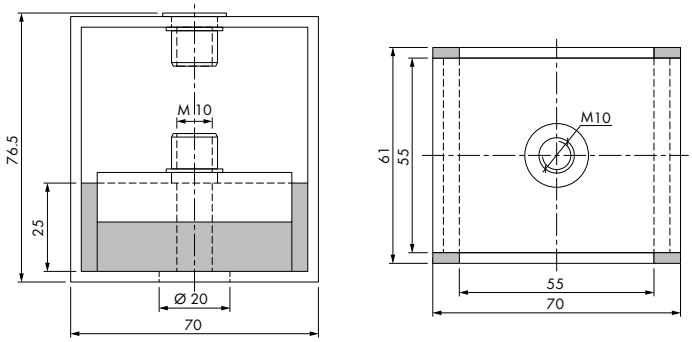

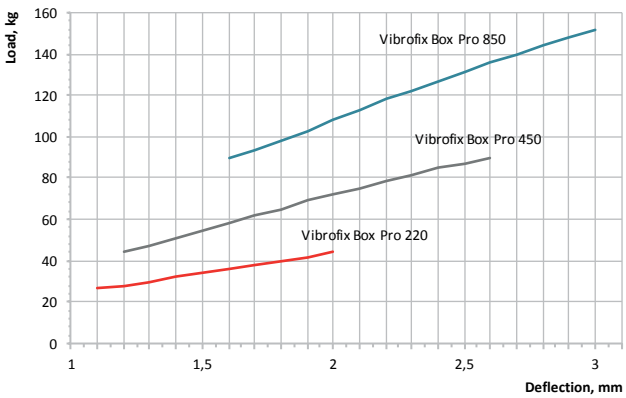

Deflection
of the elastic element
depending on the mount load

Vibrofix Uni Pro

Vibrofix®

ANTI VIBRATION MOUNTS

Vibrofix Uni Pro anti vibration mounts are used for vibration isolation of equipment which is essential to be protected from swinging or tipping over, e.g. exposed to wind force in case of roof installation.

Field of application – vibration isolation of heavy energy-intensive equipment:

- chillers
- ventilation units
- commercial plants
- diesel-generator sets

Vibrofix Level Pro vibration mounts are made of durable galvanized steel with a thickness of 3 mm and equipped with a steel pin (M12). A polyurethane elastomer (Getzner Werkstoffe, Austria) is applied as an elastic element, specially designed for solving problems in the field of vibration protection.

Anti-vibration mounts are maintenance-free during the entire service life, they have perfect performance on the residual deformation of the elastic element, stable performance and high resistance to static and dynamic loads.

- efficient vibration isolation without the use of massive foundation
- equipment base level adjustment
- durability
- easy installation

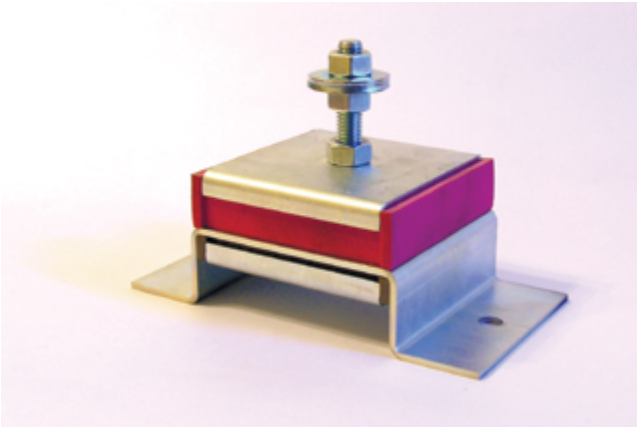

Vibrofix Uni Pro

Technical specifications

Mount type	Elastic element thickness, **mm**	Elastic element color	Operating load range, **kg**	Equipment operating frequency, **rpm**	Minimum resonance frequency, **Hz**	Deflection, **mm**
Vibrofix Uni Pro 28/25	25	blue	13..21	>1380	13,6	0,7..1,5
Vibrofix Uni Pro 28/50	50		12..20	>990	9,8	1,4..2,8
Vibrofix Uni Pro 42/25	25	pink	21..33	>1140	11,0	1,0..2,1
Vibrofix Uni Pro 42/50	50		20..33	>790	7,1	2,0..5,0
Vibrofix Uni Pro 55/25	25	green	33..39	>960	13,3	1,3..1,7
Vibrofix Uni Pro 55/50	50		33..37	>650	9,4	2,7..3,1
Vibrofix Uni Pro 110/25	25	brown	39..81	>1120	11,0	0,9..2,3
Vibrofix Uni Pro 110/50	50		37..74	>800	8,2	1,8..4,0
Vibrofix Uni Pro 220/25	25	red	81..141	>960	10,7	1,2..2,4
Vibrofix Uni Pro 220/50	50		74..116	>690	8,4	2,2..3,7
Vibrofix Uni Pro 450/25	25	grey	141..285	>910	10,2	1,3..2,8
Vibrofix Uni Pro 450/50	50		116..243	>690	7,5	2,3..5,0
Vibrofix Uni Pro 850/25	25	turquoise	285..468	>870	11,3	1,6..2,8
Vibrofix Uni Pro 850/50	50		243..414	>580	7,6	3,3..6,0

Размер таблицы поправлю позже

Vibrofix Uni Pro **Dimensions, mm**

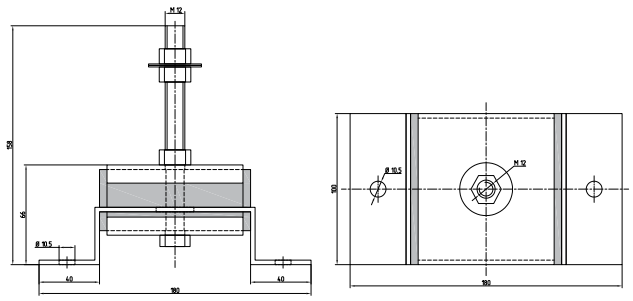

Deflection of the elastic element depending on the static load*

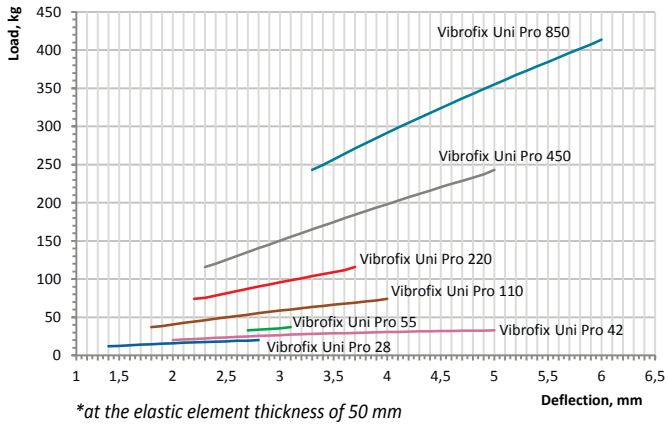

**at the elastic element thickness of 50 mm*

Vibrofix Level

Vibrofix®

ADJUSTABLE ANTI VIBRATION MOUNTS

Vibrofix Level adjustable anti-vibration mounts are designed for active and passive vibration isolation of engineering and industrial equipment of various types:

- compressors
- industrial fans
- small and medium-sized machines
- industrial sewing machines
- pump stations
- chillers
- presses
- measuring equipment

Vibrofix Level anti-vibration mounts are made of durable galvanized steel with a thickness of 2.5 mm and equipped with a steel pin (M12) or female thread (M12). A polyurethane elastomer (Getzner Werkstoffe, Austria) is applied as an elastic element, specially designed for solving problems in the field of vibration protection. Anti-vibration mounts are maintenance-free during the entire service life, and they have perfect performance on the residual deformation of the elastic element, stable performance and high resistance to static and dynamic loads.

- efficient vibration isolation without the use of massive foundation
- equipment base level adjustment
- easy installation
- durability (service life of over 30 years)
- resistance to various aggressive media

Vibrofix Level

Technical specifications

Mount type	Elastic element color	Operating load range, **kg**	Equipment operating frequency, **rpm**	Min. resonance frequency, **Hz**	Deflection, **mm**
Vibrofix Level 28	blue	13...16	>1150	13,5	1,1...1,5
Vibrofix Level 42	pink	20...25	>930	11,0	1,3...2,1
Vibrofix Level 55	green	25...30	>1100	13,0	1,2...1,7
Vibrofix Level 110	brown	50...60	>940	11,0	1,6...2,2
Vibrofix Level 220	brown	85...105	>930	11,0	1,7...2,3
Vibrofix Level 450	grey	170...210	>870	10,5	2,1...2,8
Vibrofix Level 850	turquoise	280...350	>950	11,0	2,2...2,9

Vibrofix Level **Dimensions, mm**

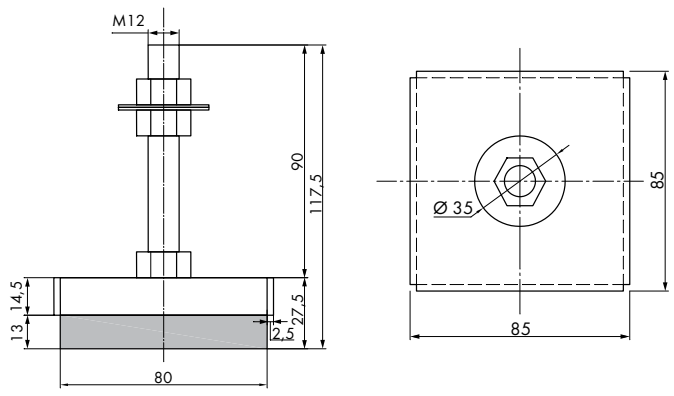

Deflection of the elastic element depending on the static load

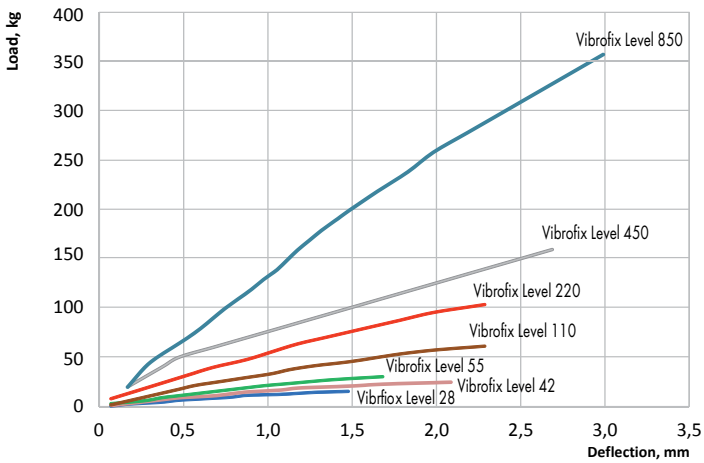

Vibrofix Level Pro

Vibrofix®

ADJUSTABLE ANTI VIBRATION MOUNTS

Vibrofix Level Pro adjustable anti-vibration mounts are used for active and passive vibration isolation of engineering and industrial equipment of various types:

- processing equipment
- chillers
- ventilation units
- commercial plants
- compressors
- pump stations

Vibrofix Level Pro vibration mounts are made of durable galvanized steel with a thickness of 10 mm. A threaded hole for the pin with a diameter of Ml2 is provided on the upper metal plate. A polyurethane elastomer (Getzner Werkstoffe, Austria) is applied as an elastic element, specially designed for solving problems in the field of vibration protection. Anti-vibration mounts are maintenance-free during the entire service life, they have perfect performance on the residual deformation of the elastic element, stable performance and high resistance to static and dynamic loads.

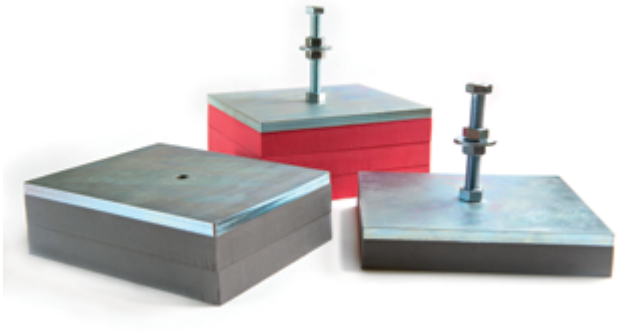

Vibrofix Level Pro

- efficient vibration isolation without the use of massive foundation
- equipment base level adjustment
- easy installation

Technical specifications

Mount type	Elastic element thickness, **mm**	Elastic element color	Operating load range, **kg**	Equipment operating frequency, **rpm**	Minimum resonance frequency, **Hz**	Deflection, **mm**
Vibrofix Level Pro 28/25	25	blue	54...85	>1800	12,9	0,8...1,7
Vibrofix Level Pro 28/50	50		51...81	>1320	9,2	1,5...3,1
Vibrofix Level Pro 28/75	75		49...79	>1080	7,5	2,2...4,5
Vibrofix Level Pro 42/25	25	pink	85...128	>1620	11,9	1...1,8
Vibrofix Level Pro 42/50	50		81...125	>1140	7,8	2...4
Vibrofix Level Pro 42/75	75		79...125	>1140	6	3...6,6
Vibrofix Level Pro 55/25	25	green	128...166	>1380	12	1,3...1,9
Vibrofix Level Pro 55/50	50		125...154	>960	8,8	2,5...3,5
Vibrofix Level Pro 55/75	75		125...148	>780	7,3	3,9...5
Vibrofix Level Pro 110/25	25	brown	166...338	>1440	10,8	0,9...2,2
Vibrofix Level Pro 110/50	50		154...318	>1080	7,6	1,9...4,6
Vibrofix Level Pro 110/75	75		148...300	>900	6,4	2,8...6,5
Vibrofix Level Pro 220/25	25	red	338...650	>1440	10,4	1,1...2,5
Vibrofix Level Pro 220/50	50		318...569	>900	7,2	2,4...5
Vibrofix Level Pro 220/75	75		300...507	>780	6,2	3,5...6,6
Vibrofix Level Pro 450/25	25	grey	650...1297	>1320	10,1	1,4...2,9
Vibrofix Level Pro 450/50	50		569...1140	>1020	7	2,7...5,8
Vibrofix Level Pro 450/75	75		507...1035	>840	5,8	3,8...8,2
Vibrofix Level Pro 850/25	25	turquoise	1297...2272	>1320	11,3	1,4...2,6
Vibrofix Level Pro 850/50	50		1140...1871	>900	7,8	3,2...5,6
Vibrofix Level Pro 850/75	75		1035...1711	>720	6,3	0,8...1,7

Vibrofix Level Pro — Dimensions, mm

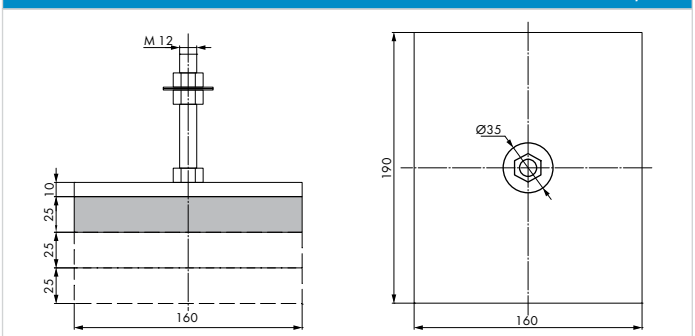

Deflection of the elastic element depending on the static load*

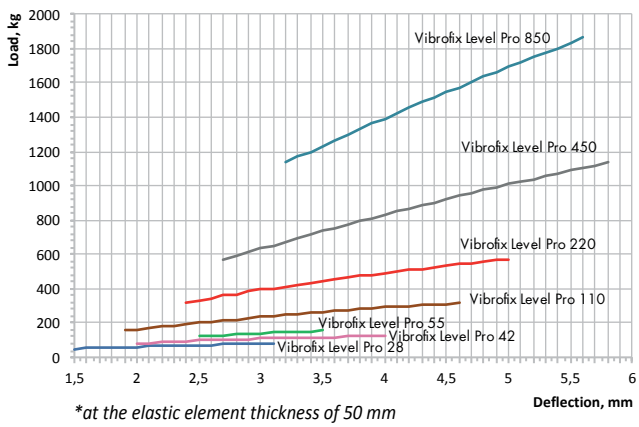

**at the elastic element thickness of 50 mm*

Vibrofix Spring SD

Vibrofix®

SPRING VIBRATION DAMPERS

Vibrofix Spring 1 SD steel spring vibration dampers consist of the base plate and cylindrical screw spring produced by Reinicke (Germany). Height adjustment is performed via a threaded rod M10. Corrosion protection: at option, galvanic or cataphoresis coating (KTL). To reduce the transmission of structure-borne noise to structures and buildings Vibrofix Spring 1 SD spring vibration dampers can additionally be completed with resilient pad of polyurethane elastomer (Getzner Werkstoffe, Austria), specially designed for solving problems in the field of vibration protection.

- Mounting height, diameter and connecting thread are the same for all types, which guarantees the interchangeability
- low resonance frequency
- spring is well visible, so it is possible to view the distance between the spring coils under load without disassembly
- easy installation

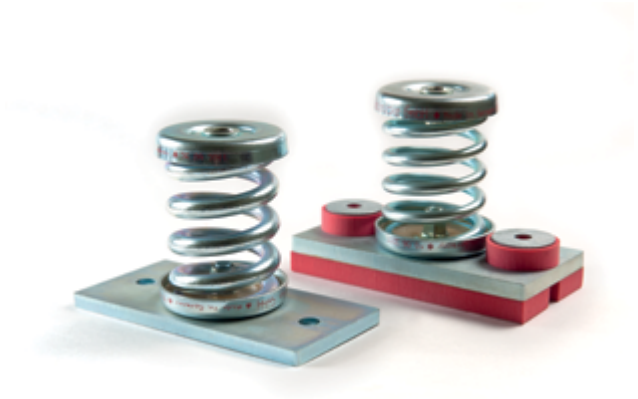

Vibrofix Spring SD

Technical specifications

Mount type	Operating load range, **kg**	Rigidity, **kg/mm**	Resonance frequency, **Hz**
Vibrofix Spring 1 (SR) SD-1	12..27	0,8	2,7..4,1
Vibrofix Spring 1 (SR) SD-2	20..39	1,3	2,9..4,1
Vibrofix Spring 1 (SR)SD-3	31..68	2,1	2,8..4,1
Vibrofix Spring 1 (SR)SD-4	48..122	3,2	2,6..4,1
Vibrofix Spring 1 (SR) SD-5	73..173	4,9	2,7..4,1
Vibrofix Spring 1 (SR) SD-6	115..276	7,7	2,6..4,1
Vibrofix Spring 1 (SR) SD-7	185..388	12,4	2,8..4,1
Vibrofix Spring 1 (SR) SD-8	286..531	19,1	3..4,1
Vibrofix Spring 1 (SR) SD-9	382..653	23.9	3..4

Spring SD — **Dimensions, mm**

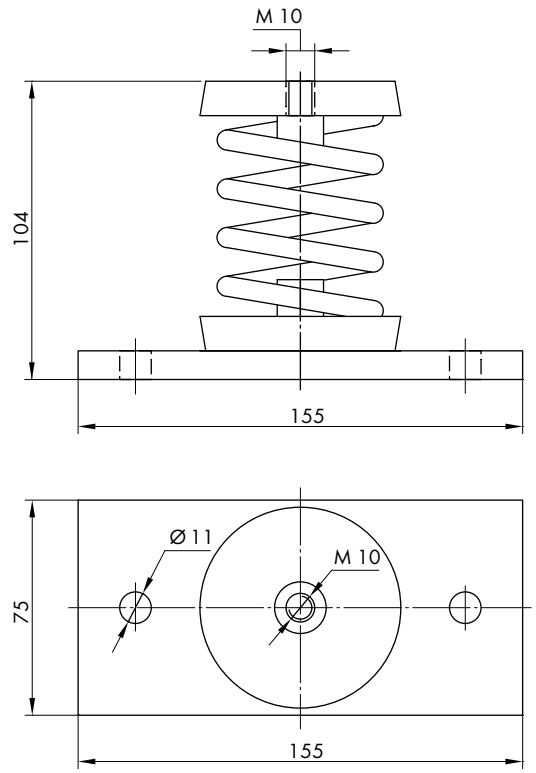

Deflection of the elastic element depending on the static load

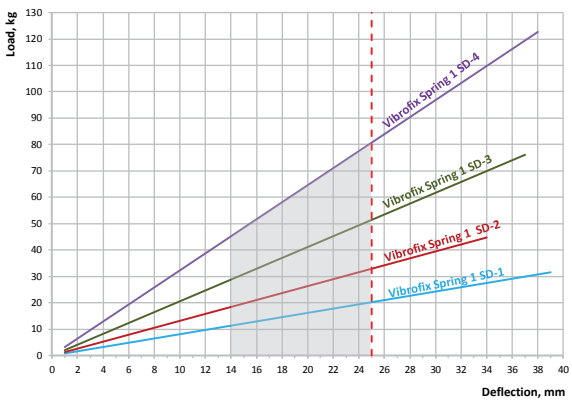

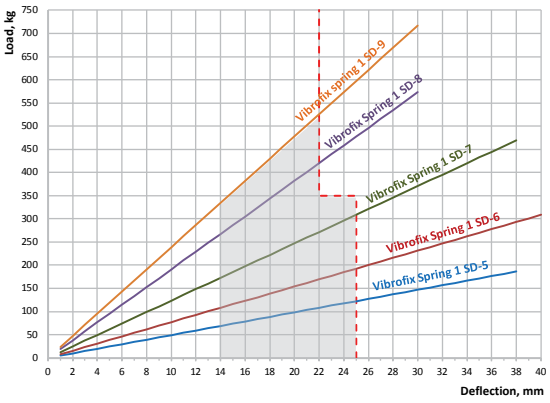

Vibrofix Spring SD

Vibrofix®

INTERLOCKED SPRING VIBRATION DAMPERS

Vibrofix Spring 2 SD, 4 SD, SD 6 interlocked spring vibration dampers consist of two base plates and a unit of several cylindrical screw springs produced by Reinicke (Germany). To achieve maximum efficiency and improved stability of the equipment spring units can be completed with different types of springs. Corrosion protection: at option, galvanic or cataphoresis coating (KTL). To reduce the transmission of structure-borne noise to the structures and buildings Vibrofix Spring 2 SD, 4 SD, 6 SD spring vibration dampers can additionally be completed with resilient pad of polyurethane elastomer (Getzner Werkstoffe, Austria), specially designed for solving problems in the field of vibration protection.

- configurability of the spring unit with different types of springs maximizes the efficiency
- low resonance frequency
- corrosion protection
- easy installation

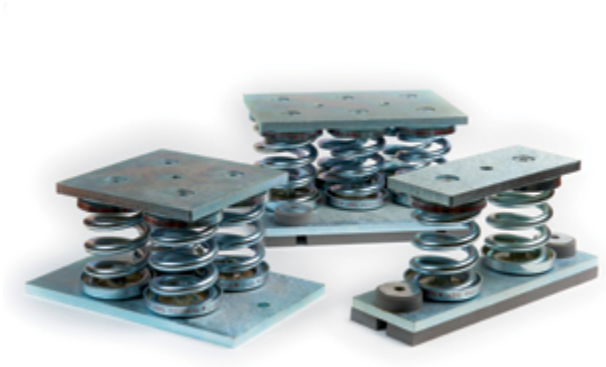

Vibrofix Spring SD (interlocked)

Vibrofix Spring SD (interlocked) — **Dimensions, mm**

Vibrofix Spring 2 SD

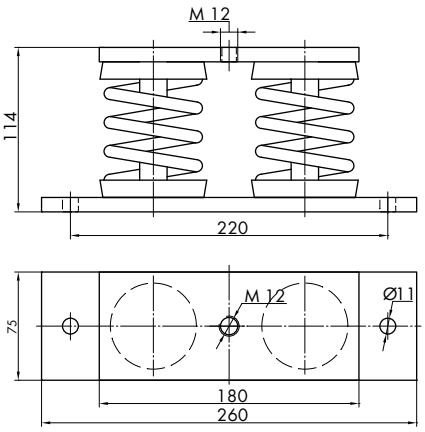

Vibrofix Spring 4 SD

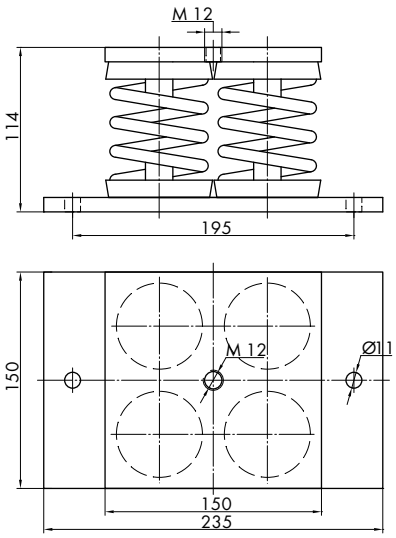

Vibrofix Spring 6 SD

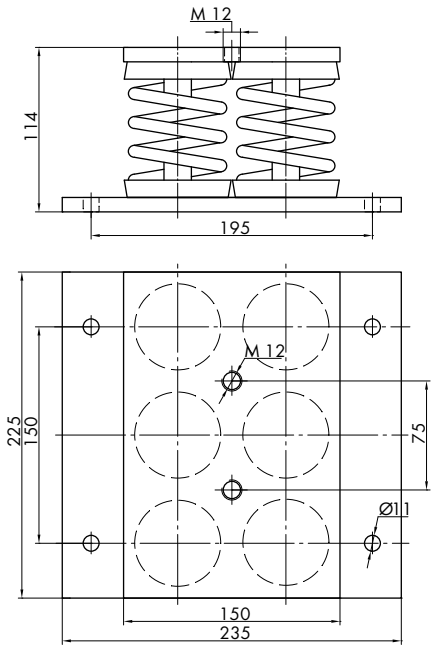

Technical specifications	
Mount type	Operating load range, **kg**
Vibrofix Spring 2 (SR) SD	24..1306
Vibrofix Spring 4 (SR) SD	48..2612
Vibrofix Spring 6 (SR) SD	72..3918

Vibrofix Spring X SR SD-XX/XX

- type and number of springs of each type
- vibration damper type
- elastomeric pad availability
- number of springs in the unit

Vibrofix Spring DSD

Vibrofix®

SPRING/ELASTOMER VIBRATION DAMPERS

Vibrofix Spring 1 DSD steel spring vibration dampers consist of the base plate and cylindrical screw spring produced by Reinicke (Germany). Corrosion protection: all DSD-type vibration damper springs have are cataphoresis coated (KTL). The core piece of this element is the damping medium of special polyurethane elastomer (Getzner Werkstoffe, Austria), which corresponds exactly to the stiffness of the spring. Damping material is permanently elastic and break-proof. To reduce the transmission of structure-borne noise to the structures and buildings Vibrofix Spring 1 DSD spring vibration dampers can additionally be completed with resilient pad of polyurethane elastomer, specially designed for solving problems in the field of vibration protection.

- damping insert provides high resistance of the equipment to shock dynamic loads
- low resonance frequency
- damping material is elastic and break-proof

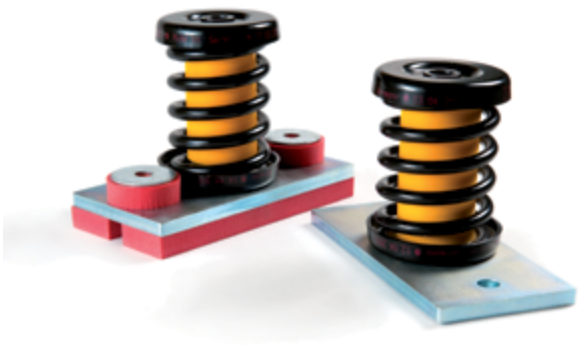

Vibrofix Spring DSD

Technical specifications

Mount type	Operating load range, **kg**	Optimum load*, **kg/mm**	Resonance frequency, **Hz**
Vibrofix Spring 1 (SR) DSD-1	12..33	26	4,9
Vibrofix Spring 1 (SR) DSD-2	14..41	38	4,5
Vibrofix Spring 1 (SR) DSD-3	28..69	61	4,4
Vibrofix Spring 1 (SR) DSD-4	39..102	92	3,9
Vibrofix Spring 1 (SR) DSD-5	59..168	148	4,6
Vibrofix Spring 1 (SR) DSD-6	102..255	214	4,0
Vibrofix Spring 1 (SR) DSD-7	112..367	337	4,8
Vibrofix Spring 1 (SR) DSD-8	194..582	541	5,1

** values of optimal load and resonance frequency are given for deflection of 24 mm*

Vibrofix Spring X SR DSD-X

- type of springs
- vibration damper type
- elastomeric pad availability
- number of springs in the unit

Spring DSD — Dimensions, mm

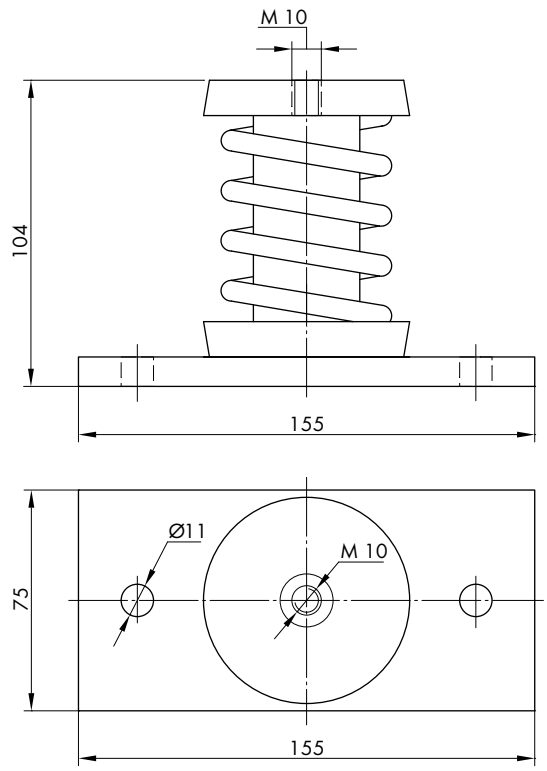

Deflection of the elastic element depending on the static load

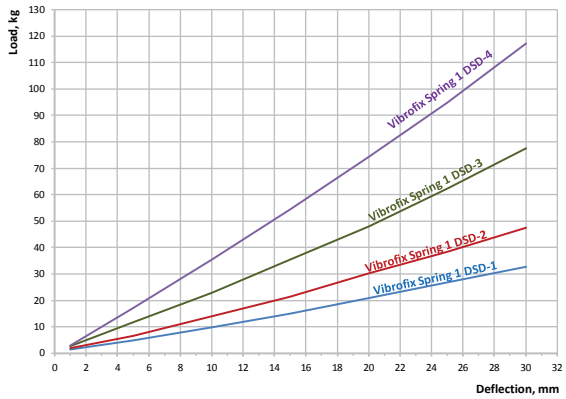

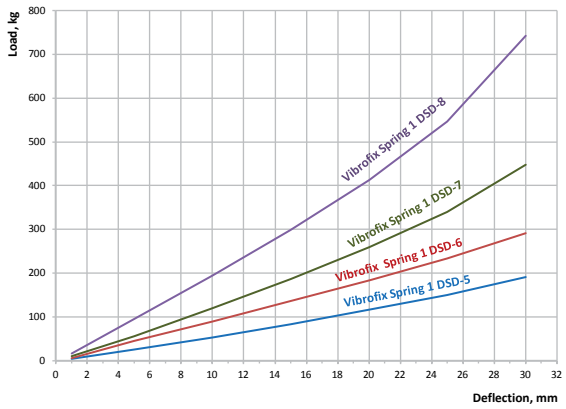

Vibrofix Spring DSD

Vibrofix®

INTERLOCKED SPRING/ELASTOMER VIBRATION DAMPERS

Vibrofix Spring 2 DSD, 4 DSD, 6 DSD interlocked spring vibration dampers consist of two base plates and a unit of several cylindrical screw springs produced by Reinicke (Germany). To achieve maximum efficiency and improved stability of the equipment spring units can be completed with different types of springs. Corrosion protection: all DSD-type vibration damper springs are cataphoresis coated (KTL). Damping medium of a special polyurethane elastomer (Getzner Werkstoffe, Austria) is elastic and break-proof. To reduce the transmission of structure-borne noise to the structures and buildings Vibrofix Spring 2 SD, 4 SD, 6 SD spring vibration dampers can additionally be completed with resilient pad of polyurethane elastomer, specially designed for solving problems in the field of vibration protection.

- configurability of the spring unit with different types of springs maximizes the efficiency
- damping material is elastic and break-proof
- low resonance frequency

Vibrofix Spring DSD (interlocked)

Vibrofix Spring DSD (interlocked) — **Dimensions, mm**

Vibrofix Spring 2 DSD

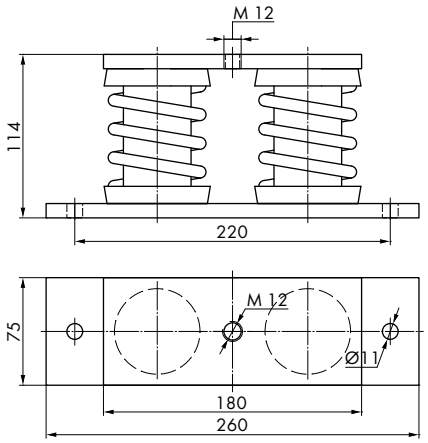

Vibrofix Spring 4 DSD

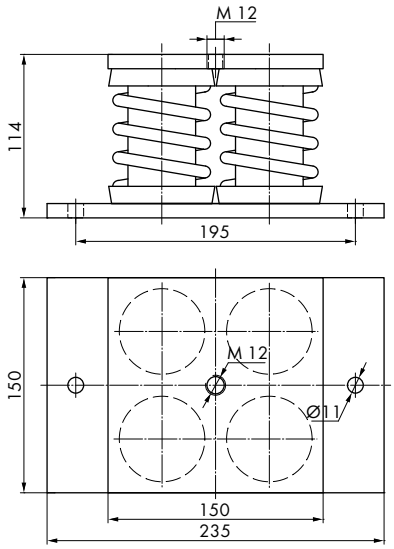

Vibrofix Spring 6 DSD

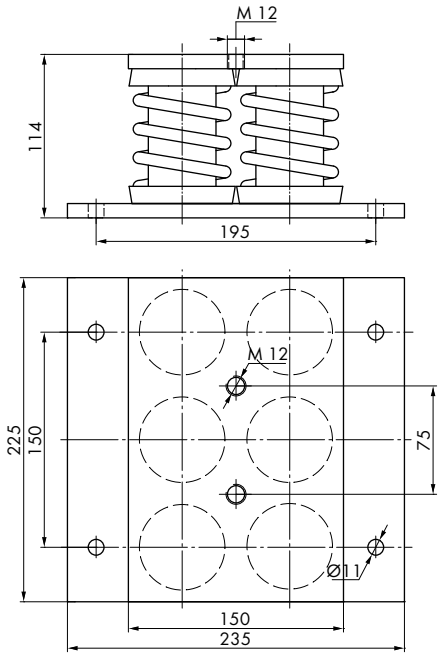

Technical specifications	
Mount type	Operating load range, **kg**
Vibrofix Spring 2 (SR) DSD	24..1306
Vibrofix Spring 4 (SR) DSD	48..2328
Vibrofix Spring 6 (SR) DSD	72..3492

Vibrofix Spring X SR DSD-XX/XX

- type and number of springs of each type
- vibration damper type
- elastomeric pad availability
- number of springs in the unit

Vibrofix Trafo

Vibrofix®

ANTI VIBRATION MOUNTS FOR TRANSFORMERS

Vibrofix Trafo mounts are used as anti-vibration mounts to reduce the acoustic impact and vibration transmission from transformers to the structures and buildings. Vibration isolator type is selected on the basis of transformer's own weight and specifications.
The vibration level reduction reaches 35 dB (98%) at the operating frequency of the transformers.
Vibrofix Trafo mounts are made of durable galvanized steel with a thickness of 10 mm. Vibration mounts are designed to provide a fixed position of the transformer's own mounts. A polyurethane elastomer (Getzner Werkstoffe, Austria) is applied as an elastic element, specially designed for solving problems in the field of vibration protection.

- mounts provide uniform load distribution over the entire area of the elastic element
- high efficiency at the operating frequency of the transformers
- easy installation

Vibrofix Trafo

Technical specifications

Mount type	Elastic element color	Transformer's own weight, **kg**	Maximum load per mount, **kg**
Vibrofix Trafo 220	red	up to 1800	450
Vibrofix Trafo 450	grey	up to 3600	900
Vibrofix Trafo 850	turquoise	up to 6100	1525

Vibrofix Trafo — Dimensions, mm

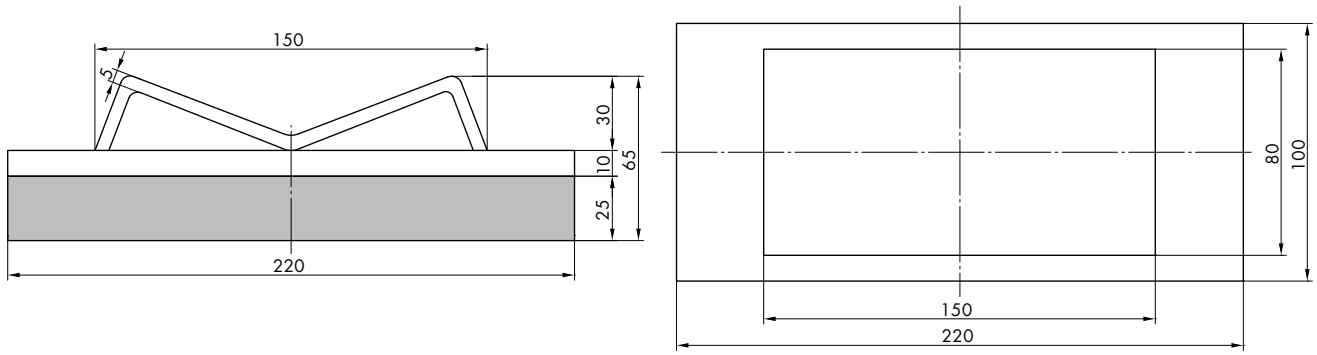

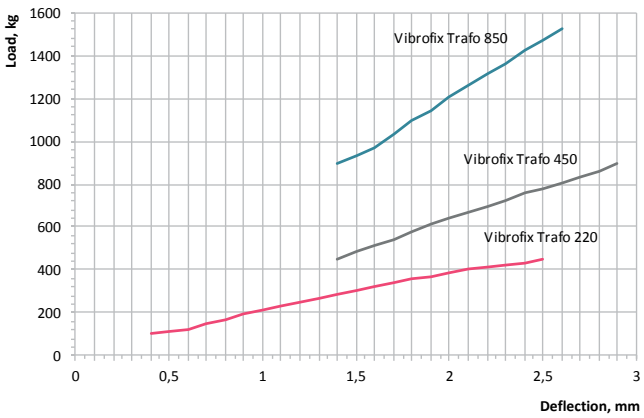

Deflection
of the elastic element
depending on the mount load

Installation

Vibrofix®

INSTALLATION GUIDELINES

Ceiling

Vibrofix P (PU) / Vibrofix SP (SPU) / Vibrofix Protector

When installing KNAUF suspended ceiling using Vibrofix acoustic mounts the hanger spacing is selected according to KNAUF technology requirements. Vibrofix mounts are installed on the ceiling slab using metal anchors. The suspended ceiling frame is secured with U-shaped brackets or adjustable suspensions on the spokes. To increase the sound-insulation value of the suspended ceiling it is recommended to fill the frame with acoustic mineral wool. In order to avoid flanking transmission the frame elements and gypsum plasterboards must adjoin the lateral faces of the walls via resilient pads.

KNAUF D112 sound isolation ceiling frame on Vibrofix PU elastic mounts

Walls

Vibrofix CD / Vibrofix Uni L / Vibrofix Protector / Vibrofix Connect / Vibrofix Liner

When installing KNAUF plasterboard linings using Vibrofix acoustic mounts the mount spacing is selected according to KNAUF technology requirements. To increase the sound reduction index of the linings it is recommended to fill the frame with acoustic mineral wool. In order to avoid flanking transmission the frame elements and gypsum plasterboards must adjoin the walls and floors via resilient pads. Mounting of Vibrofix Liner sound isolation profiles to the filler structures is performed exclusively through the standard mountings. When installing KNAUF partitions and linings using Vibrofix Liner profiles the profile type is selected according to KNAUF technology requirements.

KNAUF W623 sound isolation lining frame mounted using Vibrofix CD elastic mounts

Floor

Vibrofix Floor / Vibrofix Floor Plus

The number and spacing of Vibrofix Floor mounts is selected based on the floor surface density and the payload specified for that type of room. In addition, to ensure efficient sound isolation the load on each of the mounts should be in the range of operating loads specified in the technical specifications for that mount. Vibrofix Floor mounts are fixed to the slab with dowels or anchors with a diameter of 6 mm. As joists it is recommended to use a dry wooden beam (minimum section of 50 x 40 mm). During installation, the floor joists are leveled up and fixed within the mount with drywall screws.

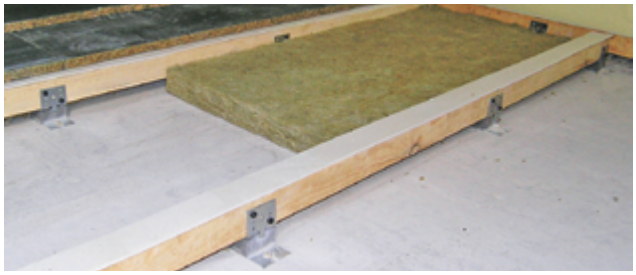

Installation of floating floor on joists using Vibrofix Floor Plus mounts

Engineering equipment

Vibrofix Uni / Vibrofix Techno / Vibrofix Box / Vibrofix Level / Vibrofix Uni Pro/ Vibrofix Spring

Selection of mounts for vibration isolation of engineering equipment is based on the type of equipment, mounting arrangement, weight and operating frequency of its vibration. Installation of Vibrofix Techno and Vibrofix Uni mounts to the ceiling is performed with metal anchors with a diameter of 6 mm. Vibrofix Level adjustable vibration dampers are mounted to the frame of the equipment to be vibration isolated and leveled up using threaded connection. Installation of equipment with the use of Vibrofix Block and Vibrofix Spring anti-vibration mounts is performed according to the design.

Generator vibration isolation using Vibrofix Block mounts

ACOUSTIC Solutions

Vibrofix GmbH
Von-Hasewinkel-Weg 87
50226 Frechen-Königsdorf
Germany
info@vibrofix.com
www.vibrofix.com

AcousticTraffic

Acoustic Traffic LLC
8/9, Haitsana Str.
01010, Kyiv
Tel./Fax +380 44 280 35 19
kiev@acoustic.ua
www.acoustic.ua

ISO 9001:2008 Management System
TÜVRheinland CERTIFIED
www.tuv.com ID 9105076078

Vibrofix®

Vibrofix® is a registered trademark. The manufacturer reserves the right to make changes in the design of products, without impairing their performance.

Products are certified in UkrSEPRO system